Queen Mary
University of London
Science and Engineering

EBU4202: Digital Circuit Design

Digital System Blocks

Dr. Md Hasanuzzaman Sagor (Hasan)
Dr. Chao Shu (Chao)
Dr. Farha Lakhani (Farha)
Dr. Fatma Benkhelifa (Fatma)

School of Electronic Engineering and Computer Science,
Queen Mary University of London,
London, United Kingdom.

Buses

- Set of two or more electrical conductors representing a binary value

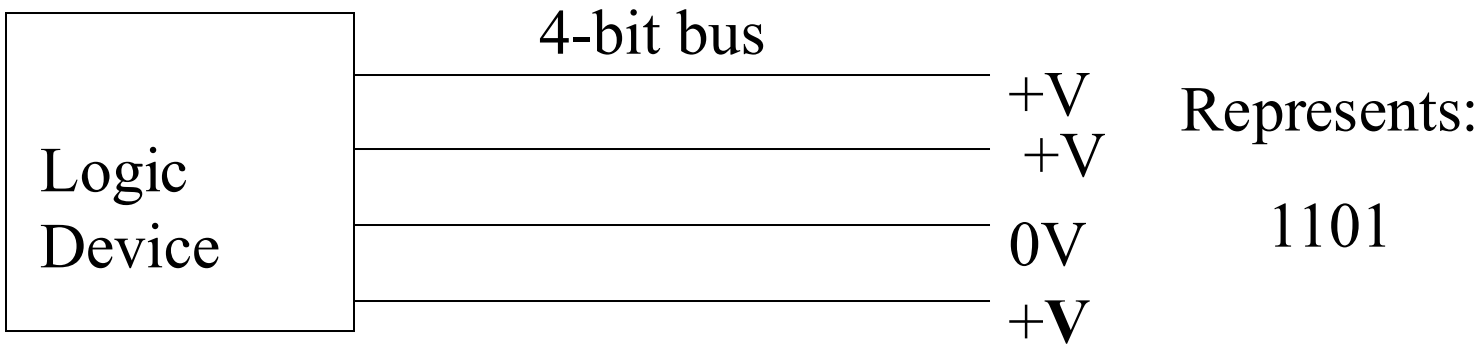

Buses

- Often more than just a one-to-one connection

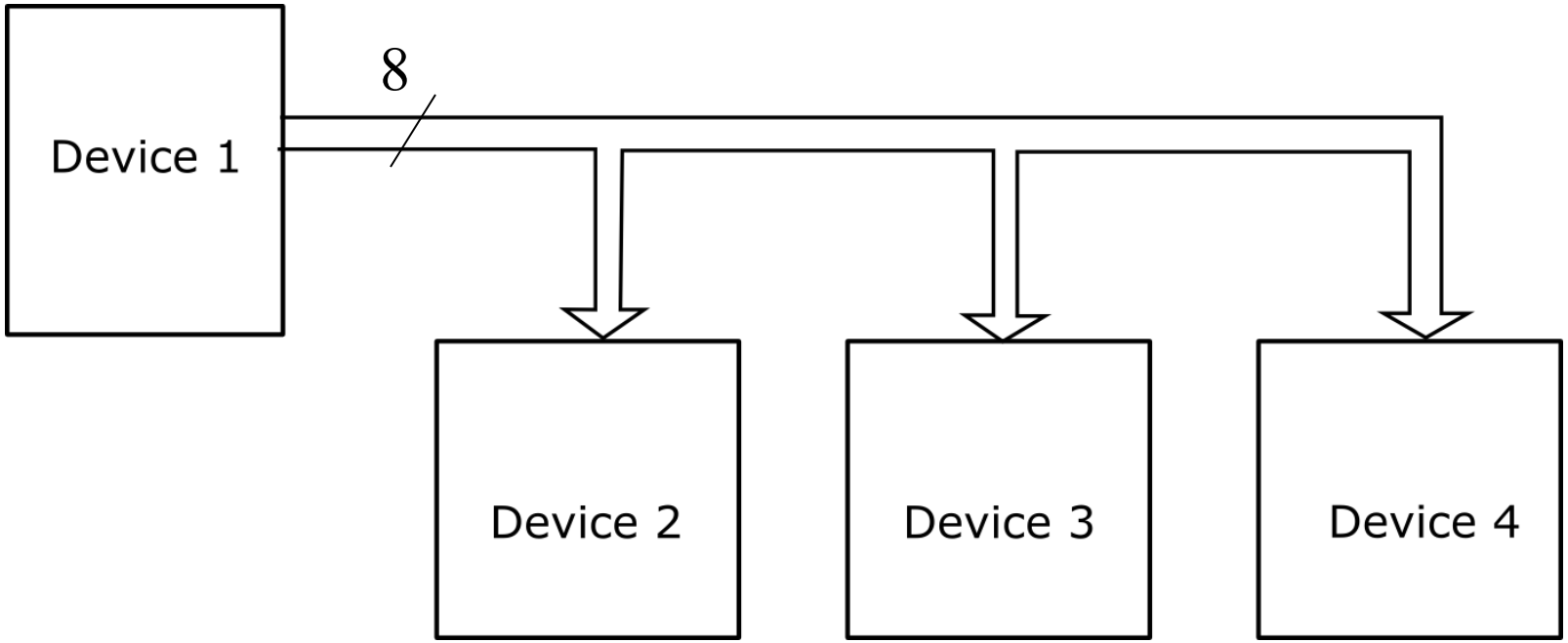

Buses

- Often more than just a one-to-one connection

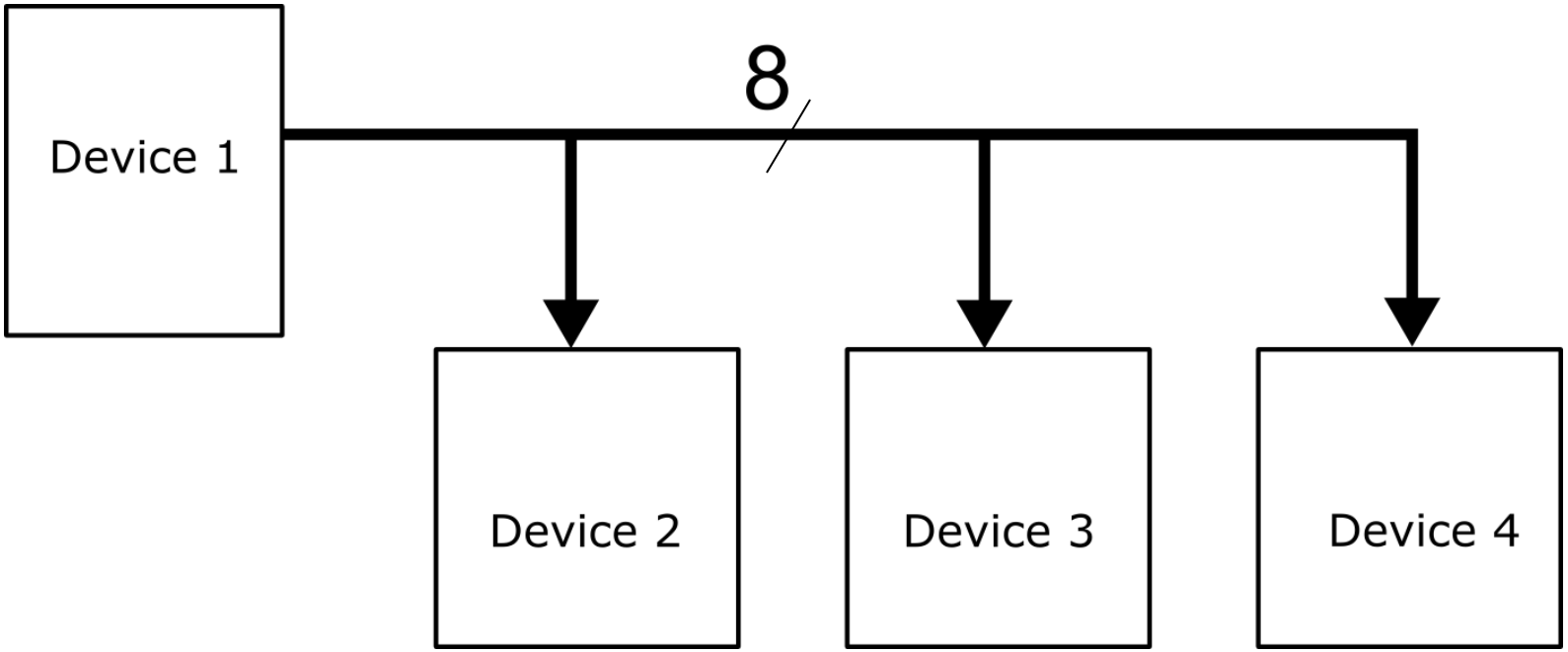

Selectors and Decoders

Selectors or *Multiplexers*

- Often labelled MUX
- 2-Input Selector:

S_0	Output
0	I_0
1	I_1

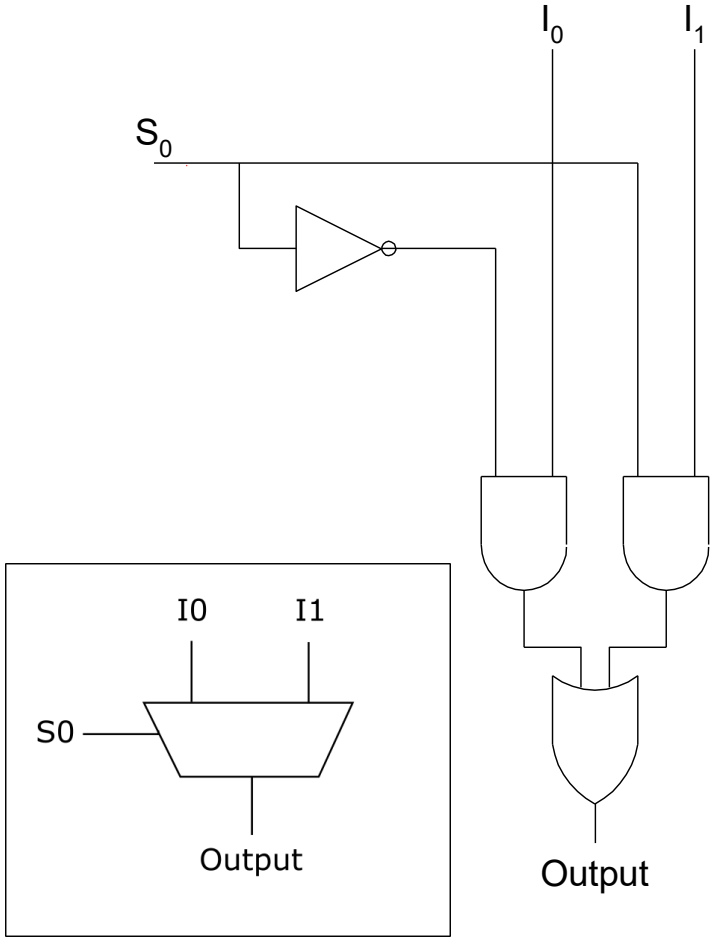

Selectors or *Multiplexers*

4-input Selector

S_1	S_0	Output
0	0	I_0
0	1	I_1
1	0	I_2
1	1	I_3

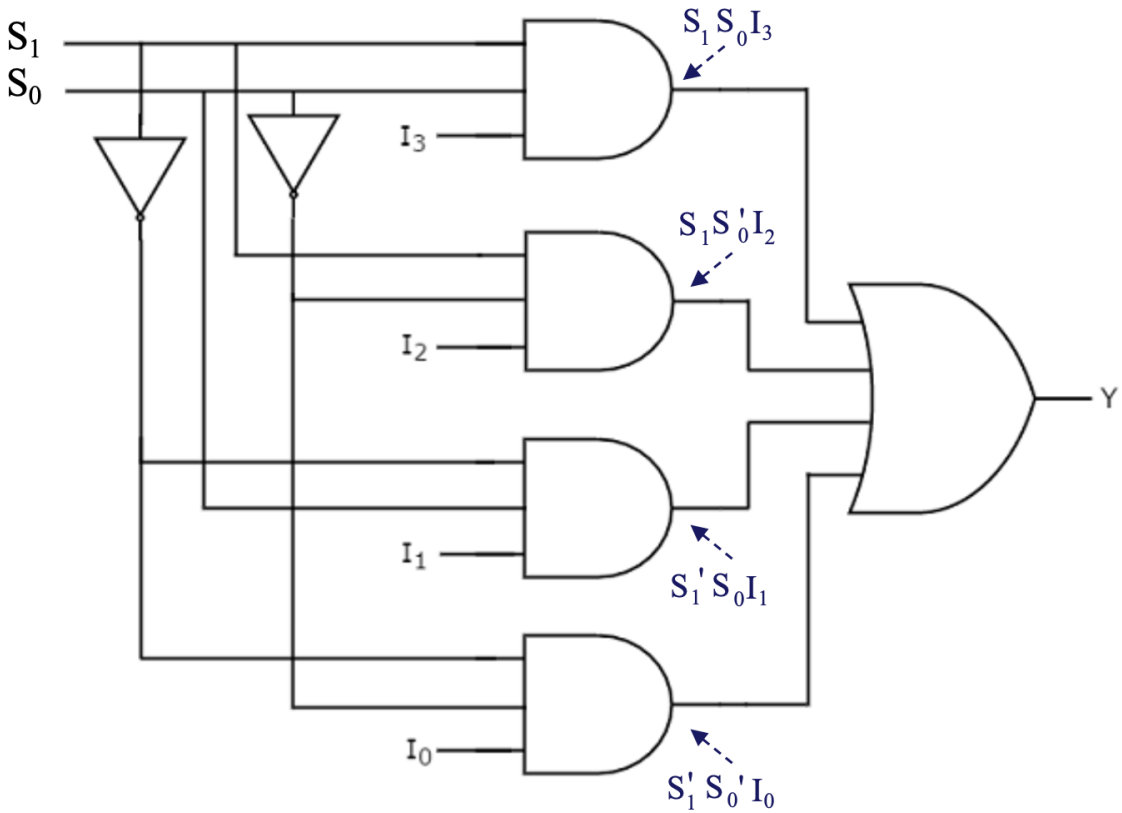

Multiplexers or Selectors

4-input Selector

S_1	S_0	Output
0	0	I_0
0	1	I_1
1	0	I_2
1	1	I_3

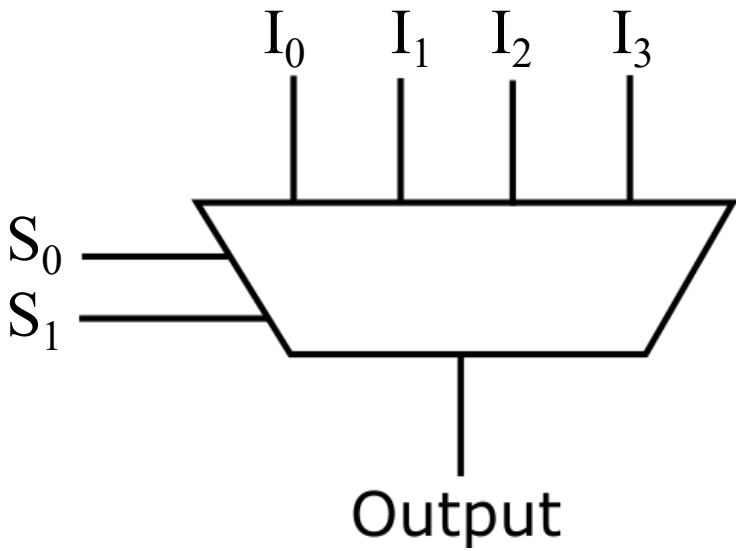

Multiplexers or Selectors

2-Input 4-bit MUX

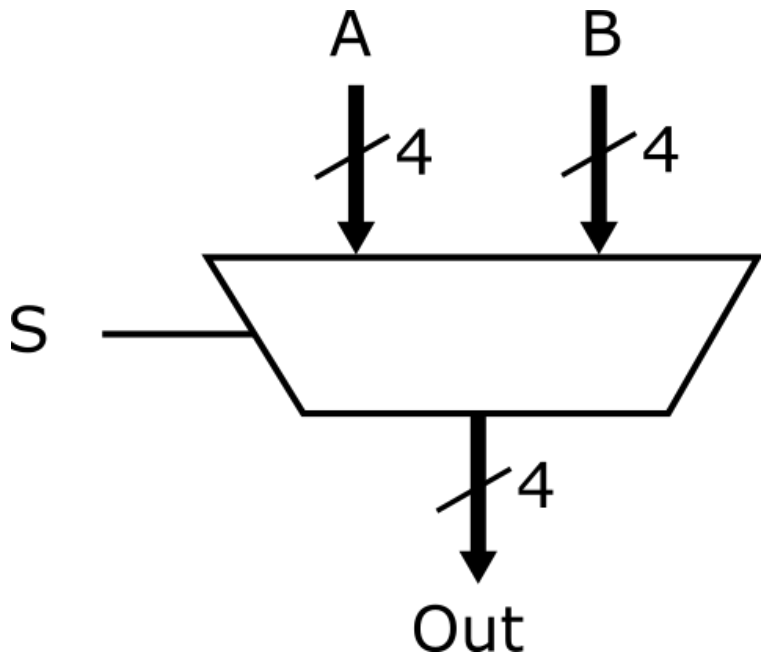

Multiplexers or Selectors

2-Input 4-bit MUX – Internal Implementation

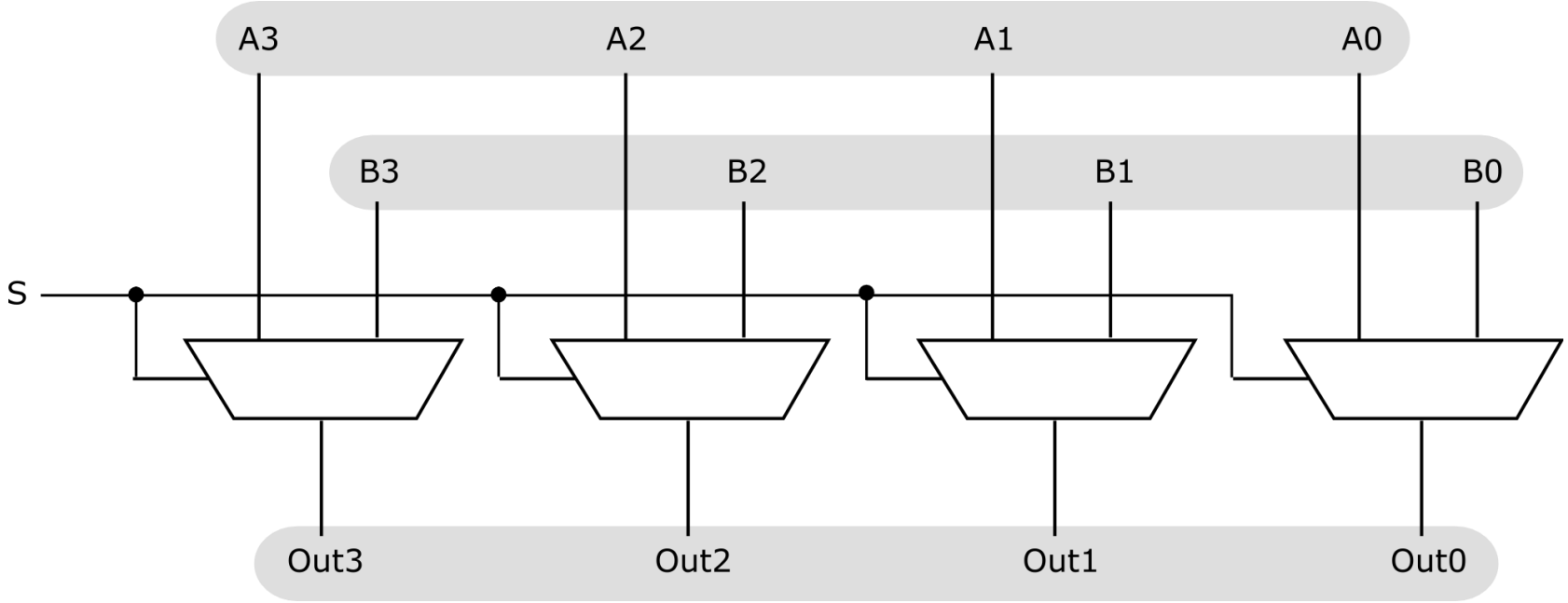

Decoder or *Demultiplexer*

- Converts n number of binary information into 2^n number of output lines.
- Outputs 1 on the wire corresponding to the binary number represented by the inputs.

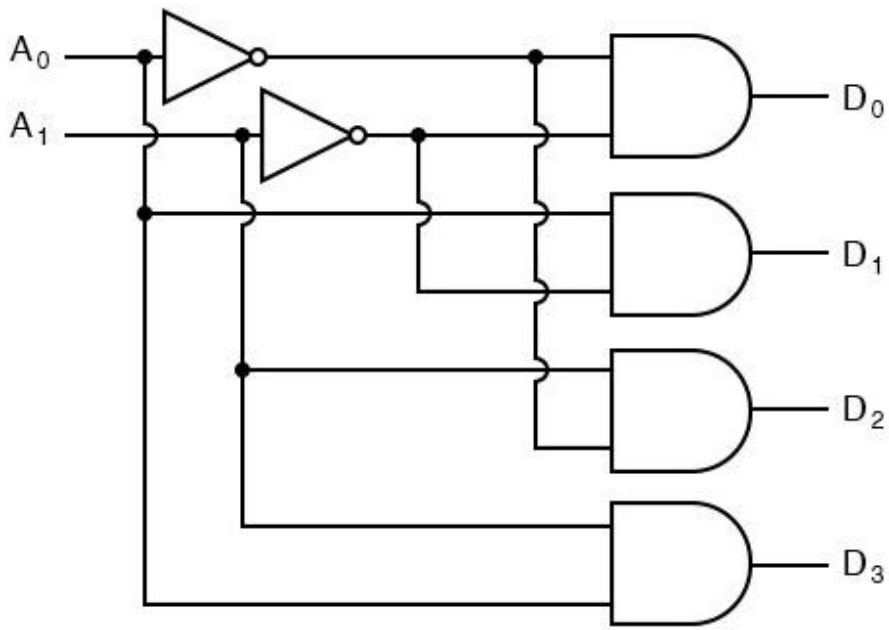

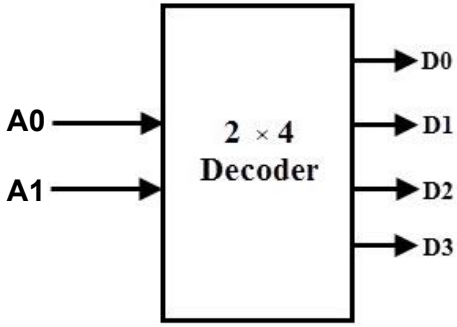

A1	A0	D3	D2	D1	D0
0	0	0	0	0	1
0	1	0	0	1	0
1	0	0	1	0	0
1	1	1	0	0	0

Magnitude Comparator (XNOR)

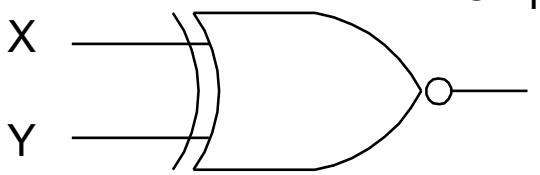

Output = (X'Y+XY')'
= XY+X'Y'

X	Y	Output
0	0	1
0	1	0
1	0	0
1	1	1

Basic comparator:

- output when X = Y
- complement gives X $\neq$Y

Other types give:

- X > Y
- X < Y
- complements give:
  - X $\leq$ Y
  - X $\geq$ Y

Multiple-bit Magnitude Comparator

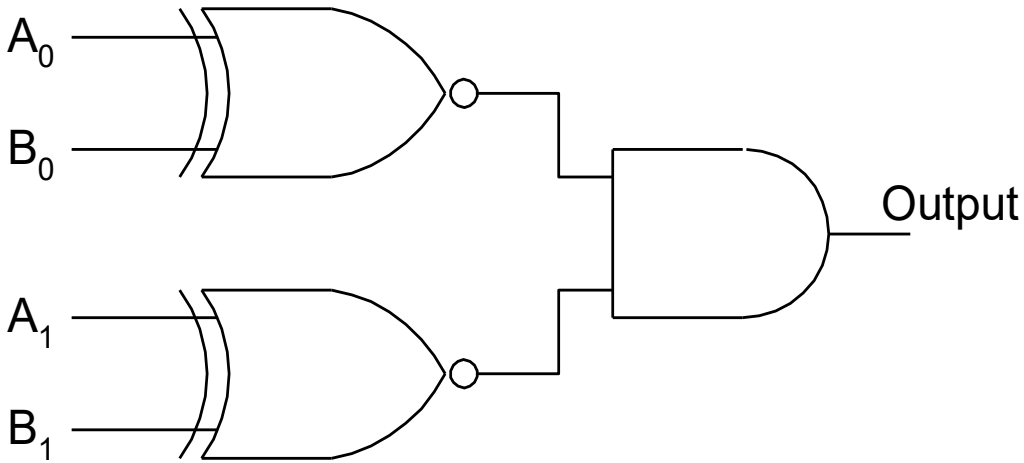

For more than 1-bit comparisons, the XNORs are ANDed together

Exercise: Show that output of above 2-bit comparator is given by:

$$(A_0B_0 + A_0'B_0')\cdot(A_1B_1 + A_1'B_1')$$

Arithmetic Units

Queen Mary
University of London

Adders - the Half-adder

Half-adder:

- accepts two binary digit inputs (X & Y)
- produces Sum (S) & Carry (C) outputs

Arithmetically:

```
      X
      Y    +
  ----------
  C   S
```

X \ Y	0	1
0	0	1
1	1	0

Sum

$$S = X\overline{Y} + \overline{X}Y = X \oplus Y$$

Truth table:

X	Y	C	S
0	0	0	0
0	1	0	1
1	0	0	1
1	1	1	0

X \ Y	0	1
0	0	0
1	0	1

Carry

$$C = XY$$

Queen Mary University of London

Examples of half-adder implementations

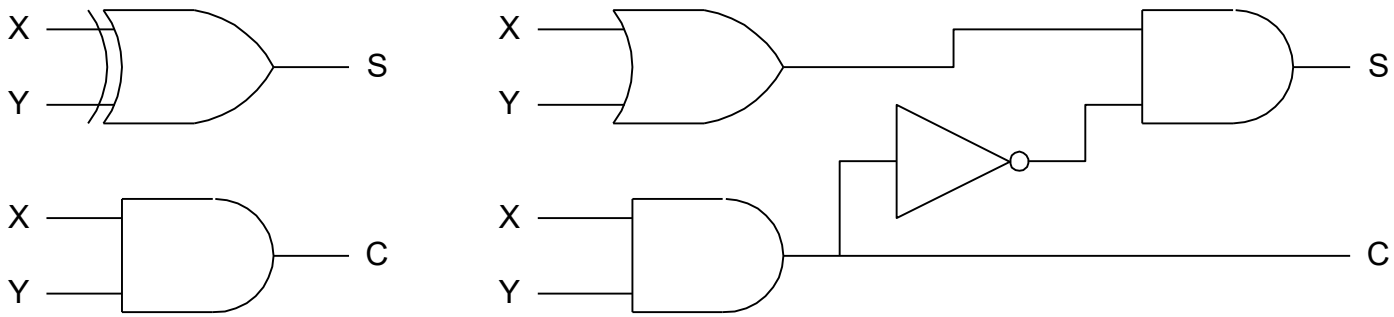

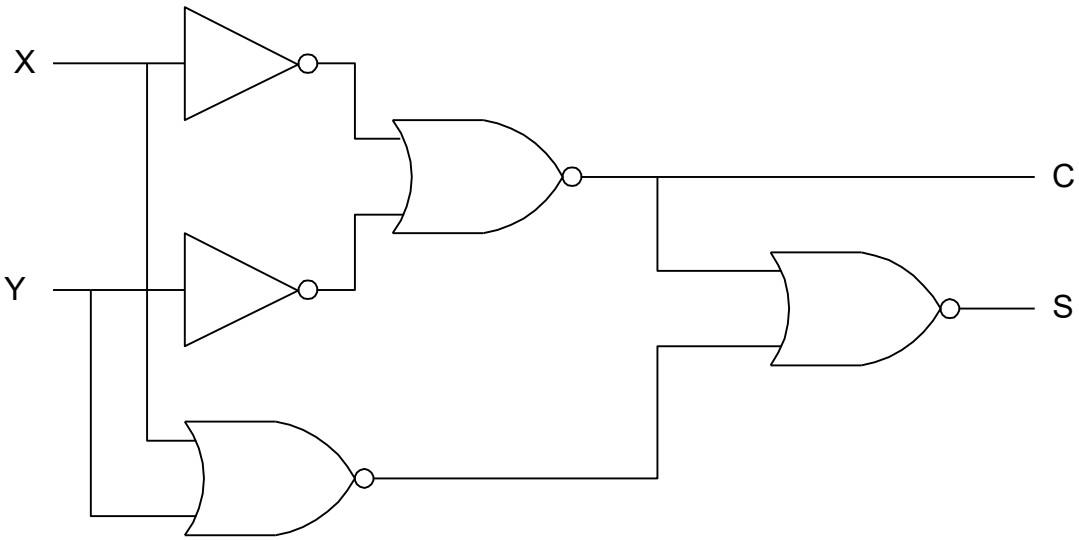

Exercise:

Show that for all circuits:

$$S = X\overline{Y} + \overline{X}Y$$

$$C = X \cdot Y$$

Queen Mary
University of London

Half-adder NAND gate implementation

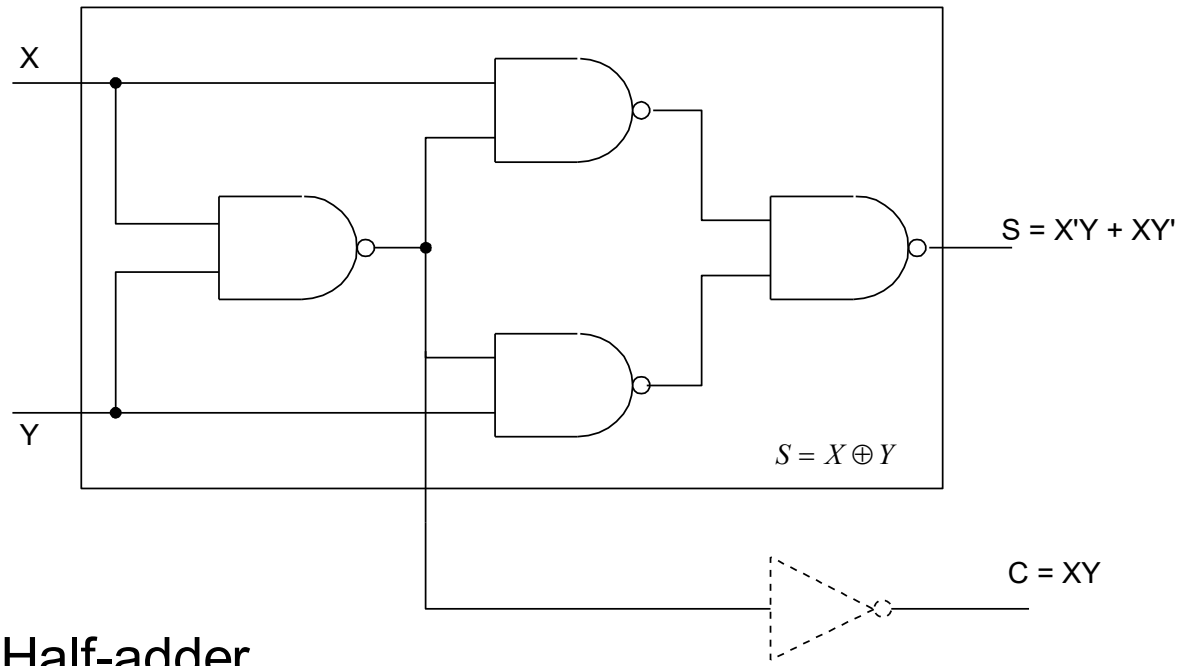

Half-adder

- Arithmetic X + Y
- Max gate delay 3 units

  Sum has 3 units delay

  Carry has 2 units delay (*Carry'* has 1 unit delay)

Queen Mary
University of London

Effect of Delay

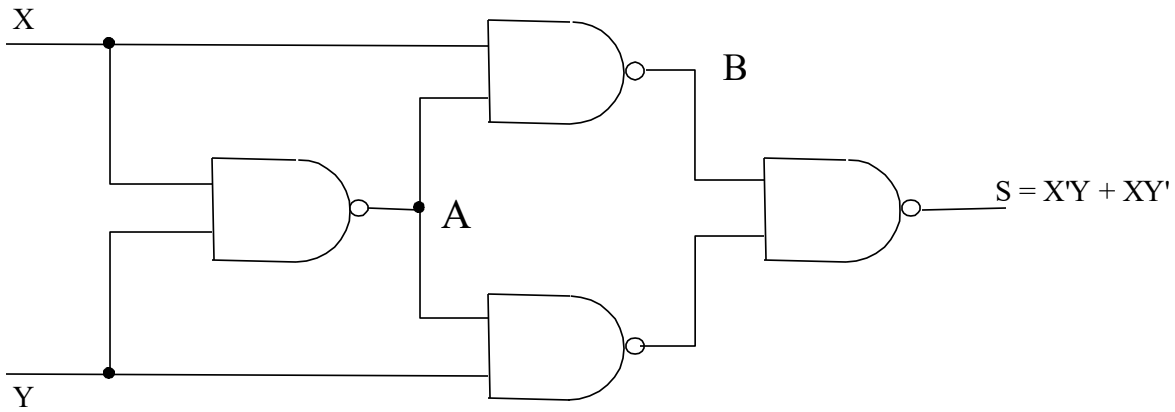

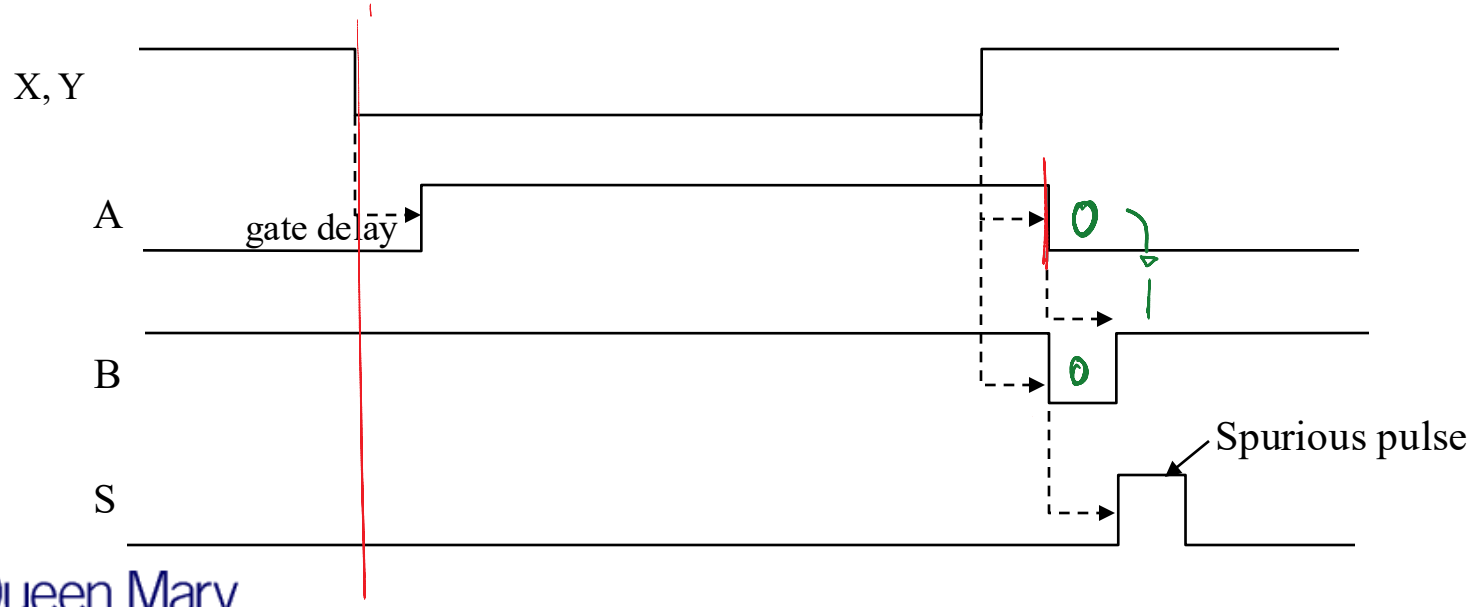

Full Adder

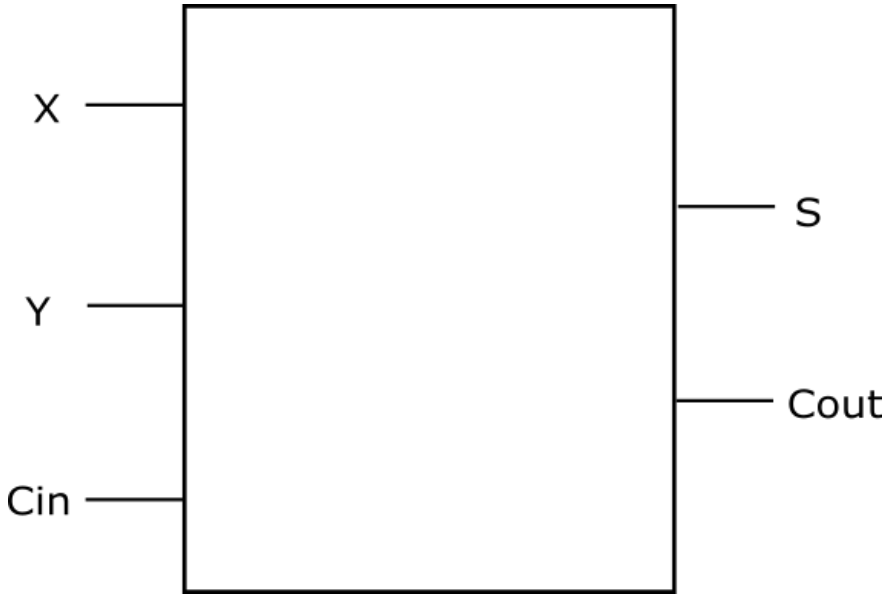

$$s = X \oplus Y \oplus c_in$$

$$c_out = (X.Y) + (X.c_in) + (Y.c_in)$$

Full Adder

C_{in}	X	Y	S	C_{out}
0	0	0	0	0
0	0	1	1	0
0	1	0	1	0
0	1	1	0	1
1	0	0	1	0
1	0	1	0	1
1	1	0	0	1
1	1	1	1	1

Cout

Cin \ XY	00	01	11	10
0	0	0	1	0
1	0	1	1	1

S

Cin \ XY	00	01	11	10
0	0	1	0	1
1	1	0	1	0

Full Adder

$$Cout = Cin.X + Cin.Y + X.Y$$

Cout	XY = 00	01	11	10
Cin = 0	0	0	1	0
Cin = 1	0	1	1	1

$$S = Cin'.X'.Y + Cin'.X.Y' + Cin.Y'.X' + Cin.X.Y$$

S	XY = 00	01	11	10
Cin = 0	0	1	0	1
Cin = 1	1	0	1	0

Full Adder gate implementations

Can be implemented with 2 half adders and an OR gate:

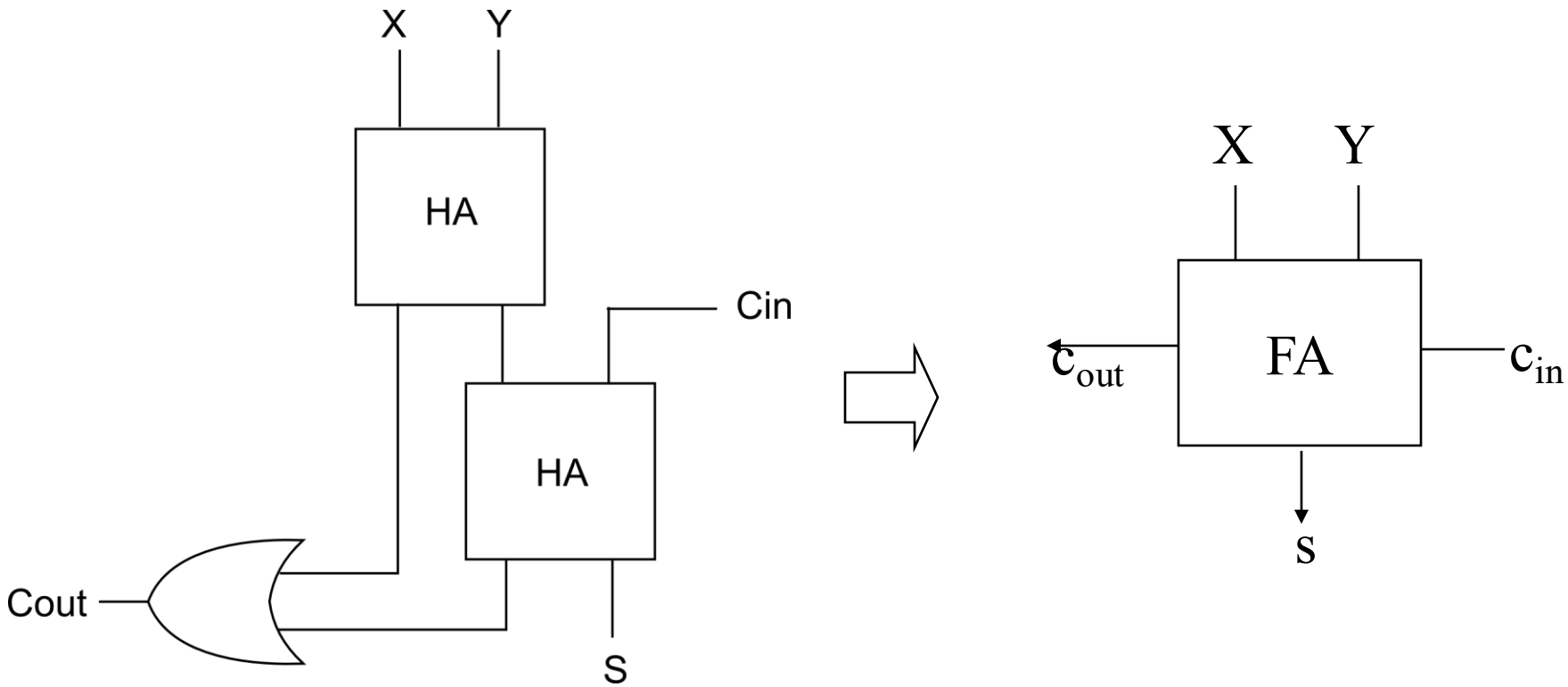

Queen Mary
University of London

Full Adder: NAND-based Ex-OR blocks

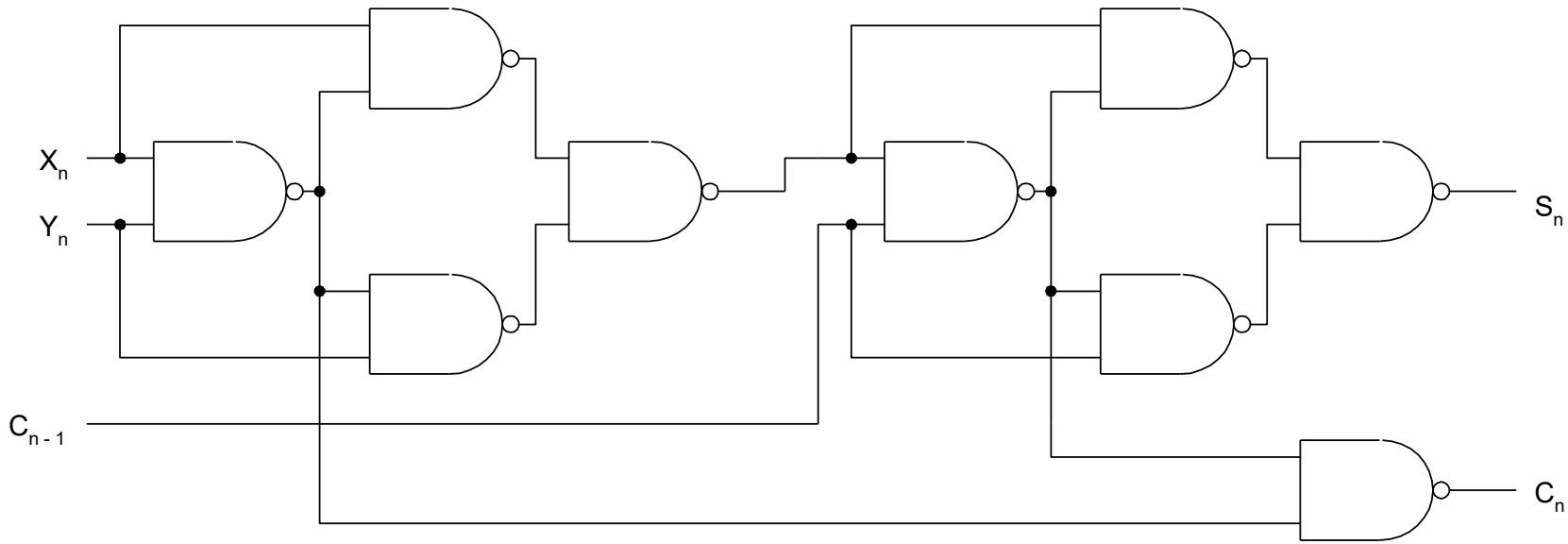

Consists essentially of two half-adders (XORs with Carry outputs)

Queen Mary
University of London

4-bit Parallel Adder

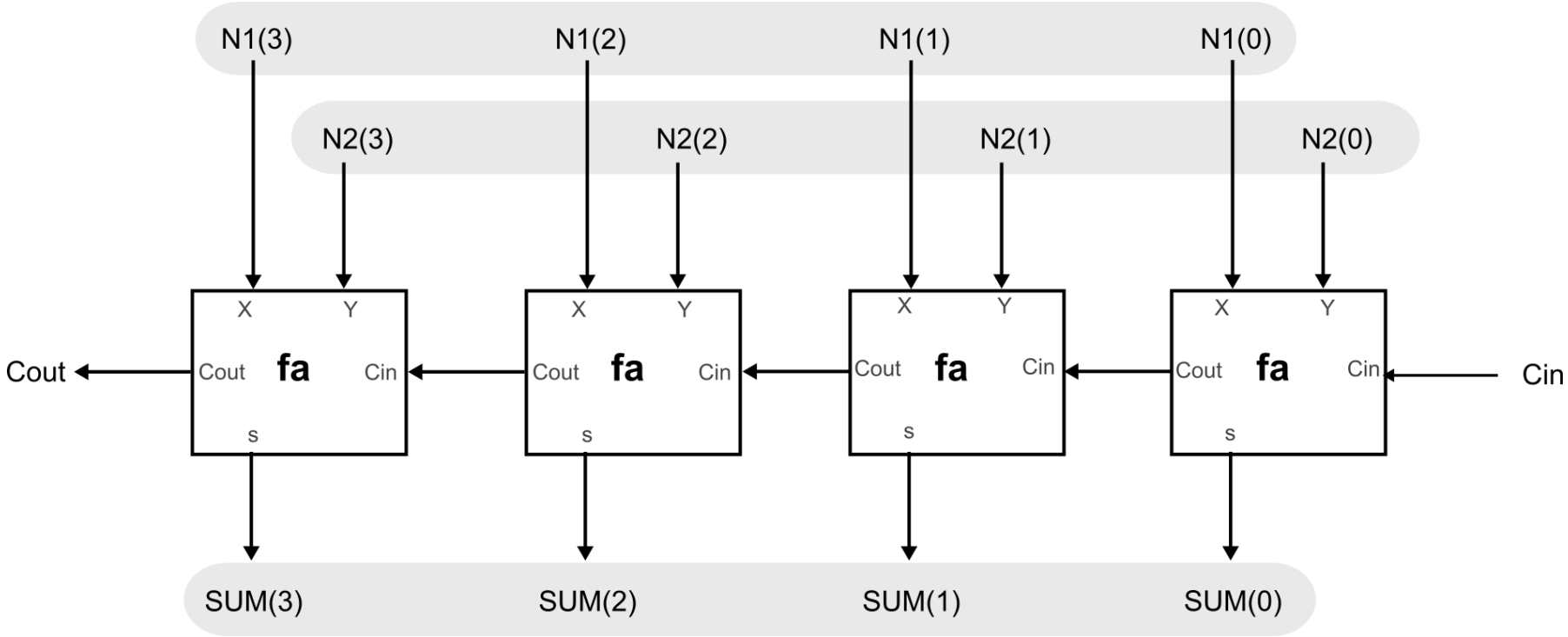

Queen Mary
University of London

4-bit Parallel Adder

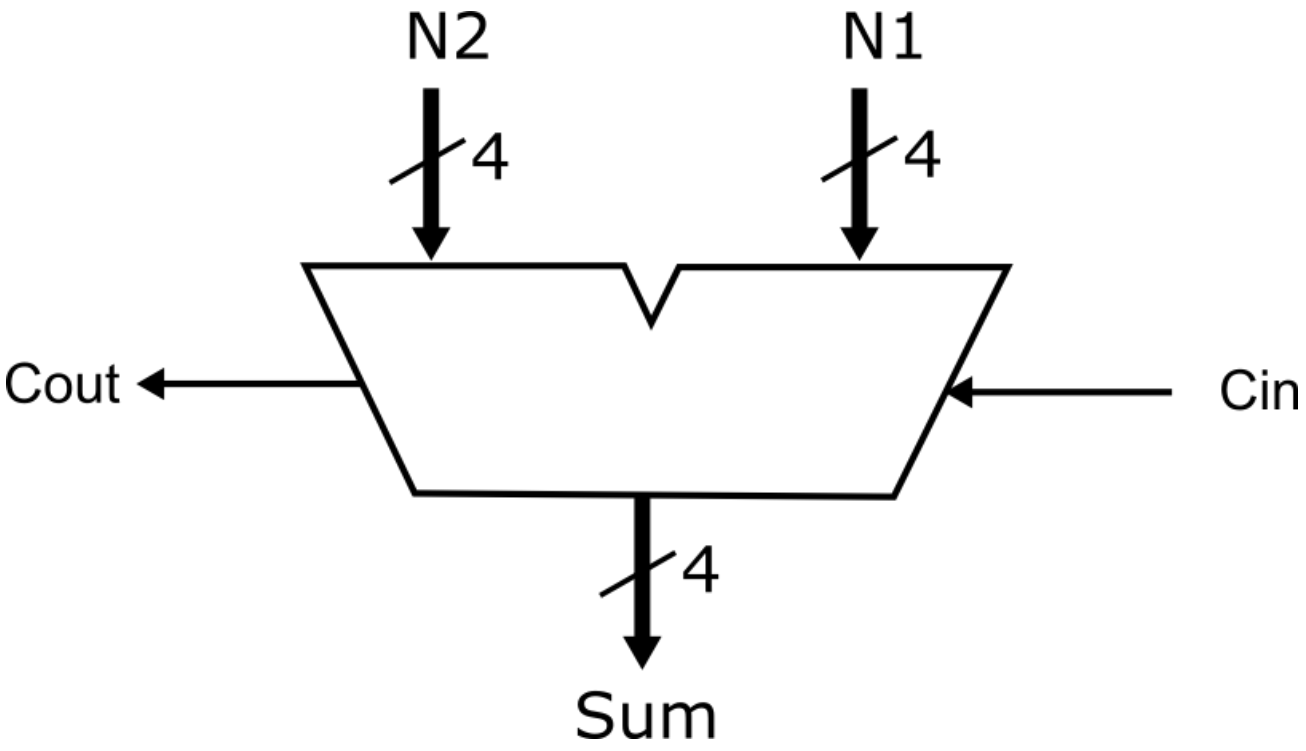

Queen Mary
University of London

Ripple Delay

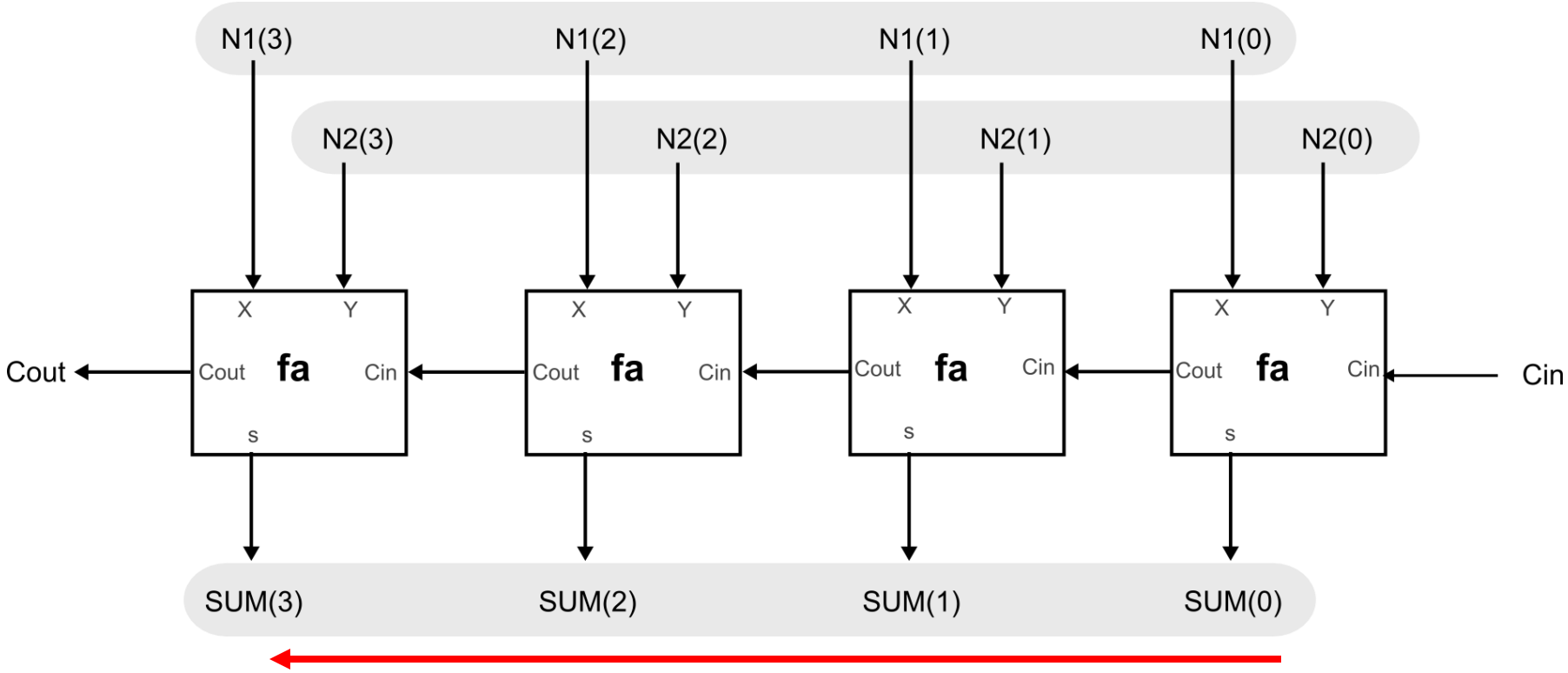

Delay caused by carry outputs at each stage

4-bit Ripple Subtractor using Adders

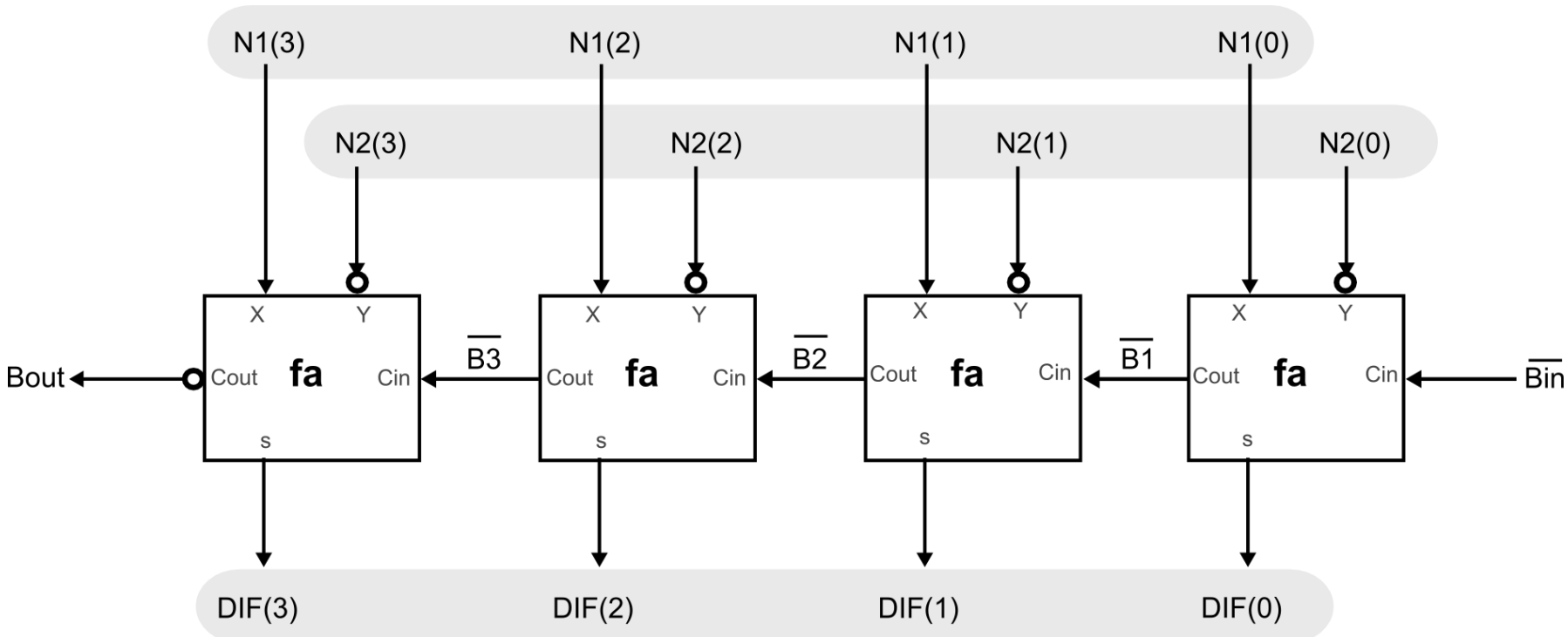

Use two's complement: A-B= A+(B'+1)

4-bit Adder/Subtractor

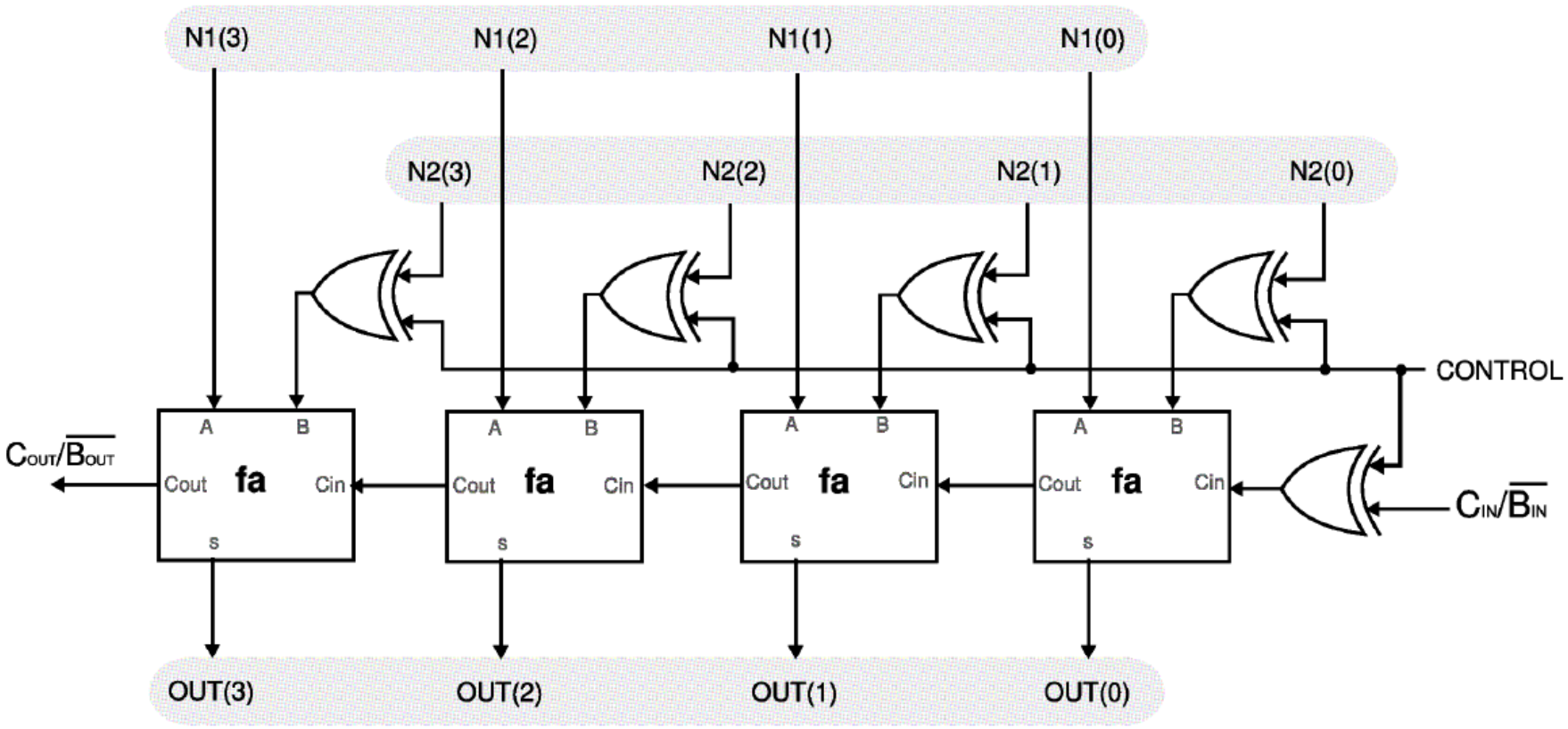

4-bit Adder/Subtractor

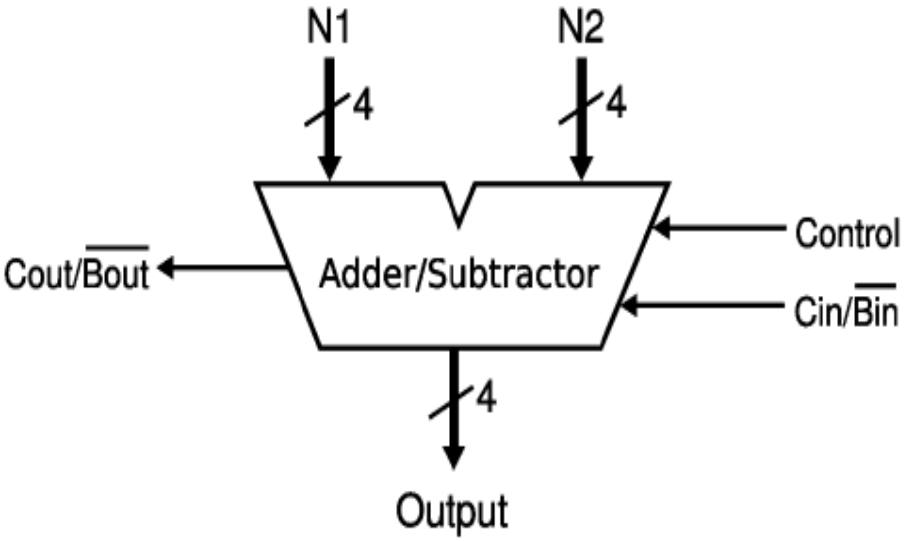

Control	Output Function
0	Add (N1 + N2)
1	Subtract (N1 – N2)

An Arithmetic Unit

Control 1	Control 0	Arithmetic Function
0	0	A + 1
0	1	A + B
1	0	A - 1
1	1	A - B

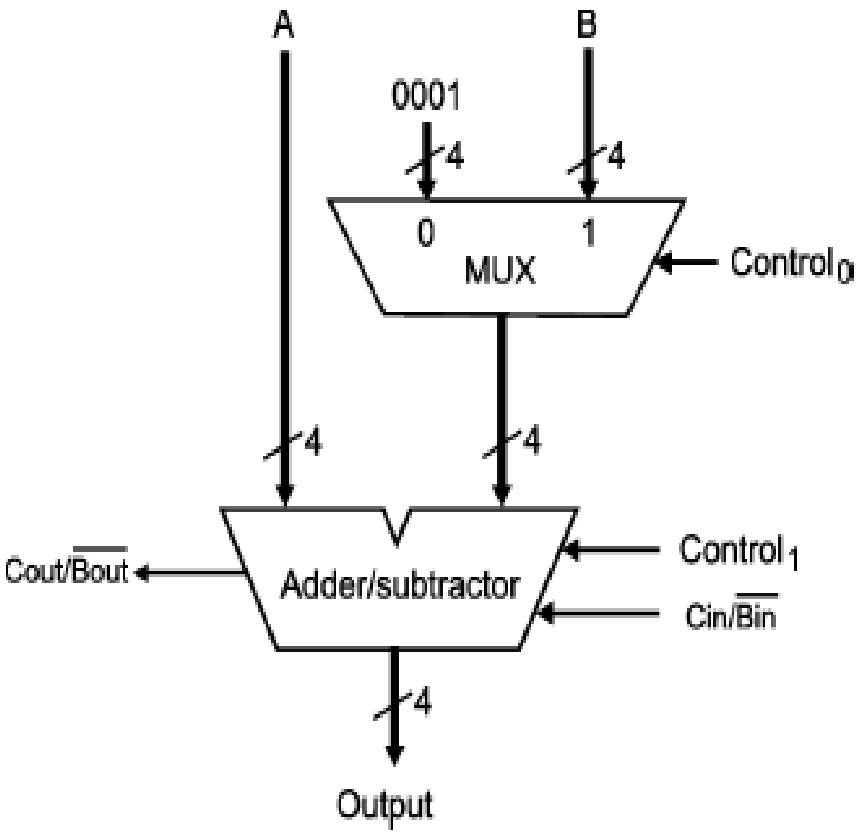

An Arithmetic Unit

- Can add and subtract
- Can also make it increment and decrement by 1
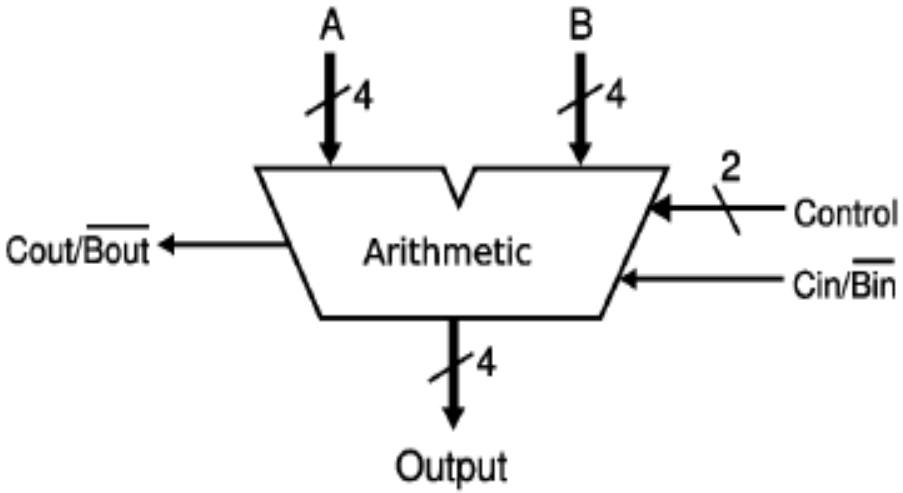
Control 1	Control 0	Arithmetic Function
0	0	A + 1
0	1	A + B
1	0	A - 1
1	1	A - B